STRUCTURAL LOAD LIMITATIONS NC

OCCUPANCY CATEGORY: II

FLOOR LIVE LOAD:
A. 50 PSF
B. 2000 LB. CONCENTRATED LOAD OVER 30 INCH x 30 INCH AREA LOCATED ANYWHERE ON FLOOR

ROOF LIVE LOAD:
A. 20 PSF

SNOW LOAD:

A. Pg = 30	PSF	GROUND SNOW LOAD
B. Pf = 23.1	PSF	FLAT ROOF SNOW LOAD
C. Ce = 1.0		SNOW EXPOSURE FACTOR
D. Is = 1.0		SNOW IMPORTANCE FACTOR
E. Ct = 1.1		SNOW THERMAL FACTOR

WIND LOAD: ASCE 7-05

A. 120	WIND SPEED
B. Iw = 1.0	WIND IMPORTANCE FACTOR
C. C	WIND EXPOSURE CATEGORY
D. GCpi= 0.18	INTERNAL PRESSURE COEFFICIENT

E. Pw: ZONE 1: 34.6 PSF Pw: ZONE 4: 38.2 PSF
ZONE 2: 55.2 PSF ZONE 5: 46.0 PSF
ZONE 3: 92.9 PSF

F. THIS BUILDING IS NOT DESIGNED FOR PLACEMENT ON THE UPPER HALF OF A HILL OR ESCARPMENT EXCEEDING 15 FEET IN HEIGHT.

SEISMIC LOAD:

A. I_E = 1.25	SEISMIC IMPORTANCE FACTOR
B. D	SITE CLASS
C. A13	SEISMIC FORCE RESISTING SYSTEM.
D. C	SEISMIC DESIGN CATEGORY
E.	EQUIVALENT LATERAL FORCE ANALYSIS PROCEDURE
F. Ss = ≤ .537	MAPPED SPECTRAL RESPONSE COEF.
G. S1 = ≤ .285	MAPPED SPECTRAL RESPONSE COEF.
H. Sds = ≤ .49	SPECTRAL RESPONSE COEFFICIENT
I. Sd1 = ≤ .34	SPECTRAL RESPONSE COEFFICIENT
J. V = 4884 LB	DESIGN BASE SHEAR
K. R = 6.5	RESPONSE MODIFICATION COEFFICIENT
L. Cs = 0.08	SEISMIC RESPONSE COEFFICIENT

FLOOD LOAD:
THIS BUILDING IS NOT DESIGNED TO BE LOCATED IN A FLOOD HAZARD AREA.

STRUCTURAL LOAD LIMITATIONS SC

BUILDING RISK CATEGORY: II

FLOOR LIVE LOAD:
A. 50 PSF
B. 2000 LB. CONCENTRATED LOAD OVER 30 INCH x 30 INCH AREA LOCATED ANYWHERE ON FLOOR

ROOF LIVE LOAD:
A. 20 PSF

SNOW LOAD:

A. Pg = 30	PSF	GROUND SNOW LOAD
B. Pf = 23.1	PSF	FLAT ROOF SNOW LOAD
C. Ce = 1.0		SNOW EXPOSURE FACTOR
D. Is = 1.0		SNOW IMPORTANCE FACTOR
E. Ct = 1.1		SNOW THERMAL FACTOR

WIND LOAD: ASCE 7-10

A1 Vult= 160 MPH	WIND SPEED
A2 Vasd = 124 MPH	WIND SPEED
B. Iw = 1.0	WIND IMPORTANCE FACTOR
C. C	WIND EXPOSURE CATEGORY
D. GCpi= 0.18	INTERNAL PRESSURE COEFFICIENT

E. Pr: ZONE 1: 37.9 PSF Pw: ZONE 4: 41.1 PSF
ZONE 2: 63.6 PSF ZONE 5: 50.7 PSF
ZONE 3: 95.7 PSF

F. THIS BUILDING IS NOT DESIGNED FOR PLACEMENT ON THE UPPER HALF OF A HILL OR ESCARPMENT EXCEEDING 15 FEET IN HEIGHT.

SEISMIC LOAD:

A. I_E = 1.25	SEISMIC IMPORTANCE FACTOR
B. D	SITE CLASS
C. A13	SEISMIC FORCE RESISTING SYSTEM.
D. C	SEISMIC DESIGN CATEGORY
E.	EQUIVALENT LATERAL FORCE ANALYSIS PROCEDURE
F. Ss = ≤ .537	MAPPED SPECTRAL RESPONSE COEF.
G. S1 = ≤ .285	MAPPED SPECTRAL RESPONSE COEF.
H. Sds = ≤ .49	SPECTRAL RESPONSE COEFFICIENT
I. Sd1 = ≤ .34	SPECTRAL RESPONSE COEFFICIENT
J. V = 4884 LB	DESIGN BASE SHEAR
K. R = 6.5	RESPONSE MODIFICATION COEFFICIENT
L. Cs = 0.08	SEISMIC RESPONSE COEFFICIENT

FLOOD LOAD:
THIS BUILDING IS NOT DESIGNED TO BE LOCATED IN A FLOOD HAZARD AREA.

GENERAL NOTES:

1. ACCESS TO BUILDING FOR PERSONS IN WHEELCHAIRS IS DESIGNED BY AND FIELD BUILT BY OTHERS AND SUBJECT TO LOCAL JURISDICTION APPROVAL. THE PRIMARY ENTRANCE MUST BE ACCESSIBLE.
2. ALL DOORS SHALL BE OPENABLE FROM THE EGRESS SIDE WITHOUT THE USE OF A KEY, TOOL, SPECIAL KNOWLEDGE OR EFFORT. MANUALLY OPERATED FLUSH BOLTS OR SURFACE BOLTS SHALL NOT BE USED.
3. ALL GLAZING WITHIN A 24 INCH ARC OF DOORS, WHOSE BOTTOM EDGE IS LESS THAN 60 INCHES ABOVE THE FLOOR, AND ALL GLAZING IN DOORS SHALL BE SAFETY, TEMPERED OR ACRYLIC PLASTIC SHEET.
4. ALL STEEL STRAPS REFERENCED ON FLOOR PLAN SHALL BE 1.5 INCH x 26 GA. WITH 7-15 GA. x 7/16 INCH CROWN x 1 INCH STAPLES EACH END OF STRAP OR EQUIVALENT FROM RIDGE BEAM TO COLUMN, AND COLUMN TO FLOOR.
5. PORTABLE FIRE EXTINGUISHER PER N.F.P.A. – 10 INSTALLED BY OTHERS ON SITE, AND SUBJECT TO LOCAL JURISDICTION.
6. PROVISIONS FOR EXIT DISCHARGE LIGHTING ARE THE RESPONSIBILITY OF THE BUILDING OWNER AND SUBJECT TO LOCAL JURISDICTION APPROVAL WHEN NOT SHOWN ON THE FLOOR PLAN (INCLUDING EMERGENCY LIGHTING, WHEN REQUIRED).
7. WHEN LOW SIDES OF ROOF PROVIDE LESS THAN 6" OF OVERHANG, GUTTERS AND DOWN SPOUTS SHALL BE SITE INSTALLED, DESIGNED BY OTHERS, SUBJECT TO LOCAL JURISDICTION APPROVAL.
8. IN WIND-BORNE DEBRIS REGIONS, EXTERIOR GLAZING SHALL BE IMPACT RESISTANT OR PROTECTED WITH AN IMPACT RESISTANT COVERING MEETING THE REQUIRMENTS OF AN APPROVED IMPACT RESISTANT STANDARD, OR ASTM E1996. WIND-BORNE DEBRIS REGIONS ARE DESIGNATED IN SECTION 1609 OF THE IBC AND NCBC
9. WINDOWS AND DOORS MUST BE CERTIFIED FOR COMPLIANCE WITH THE WIND DESIGN PRESSURE FOR COMPONENTS AND CLADDING.
10. STRUCTURAL DETAILS NOT INCLUDED IN THIS PLAN SET ARE TO BE CONSTRUCTED ACCORDING TO THE MANUFACTURERS STATE APPROVED BUILDING SYSTEM MANUAL.
11. THIS BUILDING IS DESIGNED FOR CLIMATE ZONE 3a.

WINDOW & DOOR SPECIFICATIONS

1. DBL. PANE WINDOWS ARE REQUIRED FOR ALL CLIMATE ZONES. SEE THE COMCHECK ENERGY CALCULATIONS FOR THE MAXIMUM ALLOWED U-FACTOR AND SHGC.
2. THE MAXIMUM ALLOWABLE AIR LEAKAGE RATE FOR WINDOWS IS 0.3 CFM PER SQUARE FEET OF WINDOW AREA.
3. THE MAXIMUM ALLOWABLE AIR LEAKAGE RATE FOR EXTERIOR DOORS IS 0.5 CFM PER SQUARE FEET OF DOOR AREA.

ATTENTION LOCAL INSPECTIONS DEPARTMENT

SITE INSTALLED ITEMS

THE FOLLOWING ITEMS HAVE NOT BEEN COMPLETED BY THE MANUFACTURER, HAVE NOT BEEN INSPECTED BY EMC AND ARE NOT CERTIFIED BY THE STATE MODULAR LABEL. NOTE THAT THIS LIST DOES NOT NECESSARILY LIMIT THE ITEMS OF WORK AND MATERIAL THAT MAY BE REQUIRED FOR A COMPLETE INSTALLATION. ALL SITE RELATED ITEMS ARE SUBJECT TO LOCAL JURISDICTION APPROVAL. CODE COMPLIANCE MUST BE DETERMINED AT THE LOCAL LEVEL.

1. THE COMPLETE FOUNDATION SUPPORT AND TIE DOWN SYSTEM.
2. RAMPS, STAIRS AND GENERAL ACCESS TO THE BUILDING.
3. PORTABLE FIRE EXTINGUISHER(S).
4. BUILDING DRAINS, CLEANOUTS, DRINKING FOUNTAIN, MOP SINK AND HOOK-UP TO PLUMBING SYSTEM.
5. ELECTRICAL SERVICE HOOK-UP (INCLUDING FEEDERS) TO THE BUILDING.
6. THE MAIN ELECTRICAL PANEL AND SUB-FEEDERS
7. CONNECTION OF ELECTRICAL CIRCUITS CROSSING OVER MODULE MATELINE(S) – (MULTI-UNITS ONLY).
8. STRUCTURAL AND AESTHETIC INTERCONNECTIONS BETWEEN MODULES (MULTI-UNITS ONLY).
9. WINDOW AND DOOR HIGH WIND STORM COVERINGS (PER CODE) SEE GENERAL NOTE 8.

N.C. INSTALLATION INSTRUCTIONS

ATTENTION LOCAL INSPECTIONS DEPARTMENT

INSTALLATION INSTRUCTIONS FOR THIS MODULAR BUILDING ARE INCLUDED BY ATTACHMENT TO THESE PLANS. ANY PLANS SET WHICH DOES NOT CONTAIN AN ATTACHMENT ENTITLED "INSTALLATION INSTRUCTIONS" IS INCOMPLETE. REFER TO THE FOLLOWING SECTIONS OF THE PLAN SET AND INSTALLATION FOR IMPORTANT INFORMATION CONCERNING THE INSTALLATION OF THE MODULAR BUILDING.

1. THE INTERCONNECTION BETWEEN BUILDING MODULES AT THE FLOOR AND ROOF SHALL BE SPECIFIED ON THE CROSS SECTION DRAWING ON THE PLAN SET.
2. BUILDING TIE DOWN AND ANCHORAGE REQUIREMENTS ARE AS INDICATED ON FOUNDATION PLAN.
3. ELECTRICAL INTERCONNECTIONS BETWEEN BUILDING MODULES SHALL BE PER PAGES IM2 AND IM6 OF THE INSTALLATION INSTRUCTIONS (IF APPLICABLE).
4. MECHANICAL INTERCONNECTIONS BETWEEN BUILDING MODULES SHALL BE PER PAGES IM4 AND IM7 OF THE INSTALLATION INSTRUCTIONS (IF APPLICABLE).
5. PLUMBING INTERCONNECTIONS BETWEEN BUILDING MODULES SHALL BE PER PAGES IM2 AND IM5 OF THE INSTALLATION INSTRUCTIONS (IF APPLICABLE).
6. FIRE BLOCKING SHALL BE PROVIDED PER SECTION 716.2 AND 1406.2.4 OF THE N.C. BUILDING CODE (AS APPLICABLE).
7. AIR INFILTRATION AT MODULE MATE LINES SHALL BE LIMITED BY INSTALLING SILL TAPE ALONG THE MATE LINES DURING SET UP AND/OR BY INSTALLING CONTINUOUS SHEATHING ACROSS THE MATE LINE JOINTS AFTER SET UP.

ELECTRICAL NOTES:

1. ALL CIRCUITS AND EQUIPMENT SHALL BE GROUNDED IN ACCORDANCE WITH THE APPROPRIATE ARTICLES OF THE NATIONAL ELECTRICAL CODE (NEC).
2. WHEN LIGHT FIXTURES ARE INSTALLED IN CLOSETS THEY SHALL BE SURFACE MOUNTED OR RECESSED. INCANDESCENT FIXTURES SHALL HAVE COMPLETELY ENCLOSED LAMPS. SURFACE MOUNTED INCANDESCENT FIXTURES SHALL HAVE A MINIMUM CLEARANCE OF 12 INCHES AND ALL OTHER FIXTURES SHALL HAVE A MINIMUM CLEARANCE OF 6 INCHES FROM "STORAGE AREA" AS DEFINED BY NEC 410-8(a).
3. WHEN WATER HEATERS ARE INSTALLED THEY SHALL BE PROVIDED WITH READILY ACCESSIBLE DISCONNECTS ADJACENT TO THE WATER HEATERS SERVED. THE BRANCH CIRCUIT SWITCH OR CIRCUIT BREAKER SHALL BE PERMITTED TO SERVE AS THE DISCONNECTING MEANS ONLY WHERE THE SWITCH OR CIRCUIT BREAKER IS WITHIN SIGHT FROM THE WATER HEATER OR IS CAPABLE OF BEING LOCKED IN THE OPEN POSITION.
4. HVAC EQUIPMENT SHALL BE PROVIDED WITH READILY ACCESSIBLE DISCONNECTS ADJACENT TO THE EQUIPMENT SERVED. A UNIT SWITCH WITH A MARKED "OFF" POSITION THAT IS A PART OF THE HVAC EQUIPMENT AND DISCONNECTS ALL UNGROUNDED CONDUCTORS SHALL BE PERMITTED AS THE DISCONNECTING MEANS WHERE OTHER DISCONNECTING MEANS ARE ALSO PROVIDED BY A READILY ACCESSIBLE CIRCUIT BREAKER.
5. PRIOR TO ENERGIZING THE ELECTRICAL SYSTEM THE INTERRUPTING RATING OF THE MAIN BREAKER MUST BE DESIGNED AND VERIFIED AS BEING IN COMPLIANCE WITH SECTION 110-9 OF THE NEC BY LOCAL ELECTRICAL CONSULTANT.
6. THE MAIN ELECTRICAL PANEL AND FEEDERS ARE DESIGNED BY OTHERS, SITE INSTALLED AND SUBJECT TO LOCAL JURISDICTION APPROVAL.
7. ALL CIRCUITS CROSSING OVER MODULE MATING LINE(S) SHALL BE SITE CONNECTED WITH APPROVED ACCESSIBLE JUNCTION BOXES, OR CABLE CONNECTORS.
8. ALL RECEPTACLES INSTALLED IN WET LOCATIONS (EXTERIOR) SHALL BE IN WEATHER PROOF (WP) ENCLOSURES. THE INTEGRITY OF WHICH IS NOT AFFECTED WHEN AN ATTACHMENT PLUG CAP IS INSERTED OR REMOVED. THE RECEPT ITSELF SHALL ALSO BE LISTED FOR DAMP AND WET LOCATIONS AS PER NEC AND NCEC
9. EXTERIOR LIGHTS NOT INTENDED FOR 24 HOUR USE SHALL BE CONNECTED TO A PHOTOCELL OR TIMER.

ELECTRICAL SCHEDULE 'A'

CIRCUIT	NOMENCLATURE	BREAKER (AMPS)	WIRE (CU.)
1, 3	HVAC	60 A (2P) HACR	6-2 #10 GRND.
7	WATER HEATER	20 A(1P)	12-2 NM
5	DED. CKT. 1.9KW 120V.,1ø	20 A(1P)	12-2 NM
4, 6, 8	RECEPTACLES/FAN	20 A	12-2 NM
2	LIGHTING	20 A	14-2 NM

ELECTRICAL PANEL SIZING:

DESCRIPTION	PANEL 'A'	KVA
GENERAL LIGHTING		
.0035 KW/SF X 619 SF X 1.25=		2.4
17 RECEPTS AT 180VA/1000=		3.1
WATER HEATER 1.9KW x 1.25 =		2.4
1 FANS AT .3 KW X 1.25=		.4
HVAC		10.5
DED. CKT. 1.9KW x 1.25 =		2.4

TOTAL 21.2 KW
TOTAL/240 X 1000= 89 AMPS
INSTALL 100 AMP PANEL
120/240 V 1ø

ELECTRICAL SCHEDULE 'B'

CIRCUIT	NOMENCLATURE	BREAKER (AMPS)	WIRE (CU.)
1, 3	HVAC	60 A (2P) HACR	6-2 #10 GRND.
4	RECEPTACLES/FAN	20 A	12-2 NM
2	LIGHTING/FAN	20 A	14-2 MC

ELECTRICAL PANEL SIZING:

DESCRIPTION	PANEL 'B'	KVA
GENERAL LIGHTING		
.0035 KW/SF X 882 SF X 1.25=		3.9
7 RECEPTS AT 180VA/1000=		1.3
WATER HEATER 1.9KW x 1.25 =		–
2 FANS AT .3 KW X 1.25=		.8
HVAC		10.5

TOTAL 16.5 KW
TOTAL/240 X 1000= 69 AMPS
INSTALL 100 AMP PANEL
120/240 V 1ø

ELECTRICAL SCHEDULE 'C'

CIRCUIT	NOMENCLATURE	BREAKER (AMPS)	WIRE (CU.)
1, 3	HVAC	60 A (2P) HACR	6-2 #10 GRND.
4, 6	RECEPTACLES/FAN	20 A	12-2 NM
2	LIGHTING/FAN	20 A	14-2 MC

ELECTRICAL PANEL SIZING:

DESCRIPTION	PANEL 'C'	KVA
GENERAL LIGHTING		
.0035 KW/SF X 650 SF X 1.25=		3.0
10 RECEPTS AT 180VA/1000=		1.8
WATER HEATER 1.9KW x 1.25 =		–
2 FANS AT .3 KW X 1.25=		.8
HVAC		10.5

TOTAL 16.1 KW
TOTAL/240 X 1000= 68 AMPS
INSTALL 100 AMP PANEL
120/240 V 1ø

SYMBOLS

J-BOXES ONLY

- P, H, S — FIRE ALARM PULL STATION / FIRE ALARM HORN/STROBE / FIRE ALARM STROBE LIGHT
- J — JUNCTION BOX (NON POWERED UNLESS CIRCUIT NO. IS SHOWN)
- S — SMOKE DETECTOR
- DUPLEX RECEPTACLE 120 V.
- SINGLE RECEPTACLE 240 V.
- INCANDESCENT LIGHT WITH 1- 60 W. BULB
- COMPACT FLOURESENT LIGHT 1-60 W. BULB
- HIGH PRESSURE SODIUM LIGHT
- METAL HALIDE WALL PACK
- VENT FAN
- COMB. VENT FAN & LIGHT
- SUPPLY AIR REGISTER
- RETURN AIR REGISTER
- FLOOD LIGHT 2-150W BULBS
- T — THERMOSTAT
- FLUORESCENT FIXTURE WITH 2-32W TUBES
- EXIT/EMERGENCY COMBO W/BATTERY BACKUP
- EXIT/EMERGENCY COMBO W/REMOTE HEAD W/BATTERY BACKUP
- EXIT — EXIT/EMERGENCY COMBO W/BATTERY BACKUP
- EXIT SIGN W/BATTERY BACKUP
- EMERGENCY LIGHT WITH BATTERY BACKUP
- TELEPHONE JACK
- $ $3 — SWITCH & 3 WAY SWITCH
- OS $ — OCCUPANCY SENSOR SWITCH
- FE — FIRE EXTINGUISHER F.E.

PLUMBING NOTES:

1. TOILETS SHALL BE ELONGATED WITH NONABSORBENT OPEN FRONT SEATS.
2. REST ROOM WALLS SHALL BE COVERED WITH NONABSORBENT MATERIAL TO A MINIMUM HEIGHT OF 48 INCHES A.F.F. FLOORS SHALL HAVEA SMOOTH, HARD, NONABSORBENT SURFACE THAT EXTENDS UPWARD ONTO THE WALLS AT LEAST 6 INCHES.
3. THIS UNIT MUST BE CONNECTED TO A PUBLIC WATER SUPPLY AND SEWER SYSTEM IF THESE ARE AVAILABLE.
4. ALL PLUMBING FIXTURES SHALL HAVE SEPARATE SHUTOFF VALVES.
5. WATER HEATER SHALL HAVE SAFETY PAN WITH 1 INCH DRAIN TO EXTERIOR, T & P RELIEF VALVE WITH DRAIN TO EXTERIOR, AND A SHUT OFF VALVE WITHIN 3 FEET ON A COLD WATER SUPPLY LINE.
6. DWV SYSTEM SHALL BE EITHER ABS OR PVC – DWV.
7. WATER SUPPLY LINES SHALL BE CPVC, OR COPPER; AND SHALL BE INSTALLED IN ACCORDANCE WITH THE MANUFACTURERS LIMITATIONS AND INSTRUCTIONS.
8. WATER CLOSETS ARE TANK TYPE AND URINALS ARE FLUSH TANK TYPE UNLESS OTHERWISE SPECIFIED.
9. BUILDING DRAIN AND CLEANOUTS ARE DESIGNED AND SITE INSTALLED BY OTHERS, SUBJECT TO LOCAL JURISDICTION APPROVAL.
10. SHOWERS SHALL BE CONTROLLED BY AN APPROVED MIXING VALVE WITH A MAXIMUM WATER OUTLET TEMPERATURE OF 120°F (48.8°C).
11. THERMAL EXPANSION DEVICE, IF REQUIRED BY WATER HEATER INSTALLED, AND IF NOT SHOWN ON PLUMBING PLAN, IS DESIGNED AND SITE INSTALLED BY OTHERS, SUBJECT TO LOCAL APPROVAL.
12. WATER PIPES INSTALLED IN A WALL EXPOSED TO THE EXTERIOR SHALL BE LOCATED ON THE HEATED SIDE OF THE WALL INSULATION. WATER PIPING INSTALLED IN AN UNCONDITIONED ATTIC SHALL BE INSULATED WITH AN INSULATION OF R-6.5 MINIMUM.
13. PIPING IN UNCONDITIONED SPACES MUST BE PROTECTED WITH INSULATION HAVING A MINIMUM R FACTOR OF 6.5 IN ACCORDANCE WITH SECTION 305.6.

BUILDING DESIGN PARAMETERS

1.	USE/OCCUPANCY:	BUSINESS
2.	CONSTRUCTION TYPE:	VB
3.	SPRINKLER SYSTEM:	NO
4.	BUILDING AREA:	2100 S.F.
5.	BUILDING HEIGHT:	≤ 15 FEET
6.	NUMBER OF STORIES:	1
7.	NUMBER OF MODULES:	3
8.	OCCUPANT LOAD 21 BASED ON 100 SF/PERSON	
9.	EXTERIOR WALL FIRE RATING:	NOT RATED
10.	THIS BUILDING MUST BE INSTALLED WITH THE FIRE SEPARATION DISTANCES REQUIRED BY IBC & NCBC TABLE 602 AND SECTION 705.3.	
11.	ENGERGY CODE COMPLIANCE: SEE ATTACHED ENERGY CALCULATIONS.	
12.	MANUFACTURERS DATA PLATE, STATE LABELS AND EMC LABELS ARE TO BE LOCATED ADJACENT TO ELECTRICAL PANEL.	

EMC
R. JOHNSON
APPROVED
03 01 2016

ACCESSIBILITY NOTES:

1. THE INTERNATIONAL SYMBOL OF ACCESSIBILITY SIGN SHALL BE DISPLAYED AT ALL ACCESSIBLE RESTROOM FACILITIES AND AT ACCESSIBLE BUILDING ENTRANCES UNLESS ALL ENTRANCES ARE ACCESSIBLE. INACCESSIBLE ENTRANCES SHALL HAVE DIRECTIONAL SIGNS INDICATING THE ROUTE TO THE NEAREST ACCESSIBLE ENTRANCE.
2. ACCESSIBLE DRINKING FOUNTAINS SHALL HAVE A SPOUT HEIGHT NO HIGHER THAN 36 INCHES ABOVE THE FLOOR AND EDGE OF BASIN NO HIGHER THAN 34 INCHES ABOVE THE FLOOR FOR INDIVIDUALS IN WHEELCHAIRS. ADDITIONALLY, DRINKING WATER PROVISIONS SHALL BE MADE FOR INDIVIDUALS WHO HAVE DIFFICULTY BENDING.
3. WHERE STORAGE FACILITIES SUCH AS CABINETS, SHELVES, CLOSETS AND DRAWERS ARE PROVIDED AT LEAST ONE TYPE PROVIDED SHALL CONTAIN STORAGE SPACE COMPLYING WITH THE FOLLOWING: DOORS ETC. TO SUCH SPACES SHALL BE ACCESSIBLE (I.E. TOUCH LATCHES, U-SHAPED PULLS); SPACES SHALL BE 15 INCHES MINIMUM AND 48 INCHES MAXIMUM ABOVE THE FLOOR FOR FORWARD REACH OR SIDE REACH; CLOTHES RODS OR COAT HOOKS SHALL BE A MAXIMUM OF 48 INCHES ABOVE THE FLOOR (46 INCHES MAXIMUM WHEN DISTANCE FROM WHEEL CHAIR TO ROD EXCEEDS 10 INCHES). SHELVES IN KITCHENS OR TOILET ROOMS SHALL BE 40 INCHES MINIMUM AND 48 INCHES MAXIMUM ABOVE IN FLOOR.
4. CONTROLS, DISPENSERS, RECEPTACLES AND OTHER OPERABLE EQUIPMENT SHALL BE NO HIGHER THAN 48 INCHES ABOVE THE FLOOR. RECEPTACLES ON WALLS SHALL BE MOUNTED NO LESS THAN 15 INCHES ABOVE THE FLOOR. EXCEPTION; HEIGHT LIMITATIONS DO NOT APPLY WHERE THE USE OF SPECIAL EQUIPMENT DICTATES OTHERWISE OR WHERE ELECTRICAL RECEPTACLES ARE NOT NORMALLY INTENDED FOR USE BY BUILDING OCCUPANTS.
5. WHERE EMERGENCY WARNING SYSTEMS ARE PROVIED, THEY SHALL INCLUDE BOTH AUDIBLE AND VISUAL ALARMS. THE VISUAL ALARMS SHALL BE LOCATED THROUGHOUT, INCLUDING RESTROOM, AND PLACED 80 INCHES ABOVE THE FLOOR OR 6 INCHES BELOW CEILING,WHICHEVER IS LOWER.
6. ALL DOORS SHALL BE OPENABLE BY A SINGLE EFFORT. DOOR CLOSERS SHALL BE ADJUSTED SO THAT FROM AN OPEN POSITION OF 90 DEGREES, THE TIME REQUIRED TO MOVE THE DOOR TO AN OPEN POSITION OF 12 DEGREES SHALL BE 5 SECONDS MINIMUM. THE MAXIMUM FORCE REQUIRED FOR PUSHING OR PULLING OPEN DOORS OTHER THAN FIRE DOORS SHALL NOT EXCEED 5 LBS. FOR ALL SLIDING, FOLDING, AND INTERIOR HINGED DOORS.
7. FLOOR SURFACES SHALL BE STABLE, FIRM, AND SLIP-RESISTANT. CHANGES IN LEVEL BETWEEN 0.25 INCH AND 0.5 INCH SHALL BE BEVELED WITH A SLOPE NO GREATER THAN 1:2 CHANGES IN LEVEL GREATER THAN 0.5 INCH REQUIRE RAMPS. CARPET PILE THICKNESS SHALL BE 0.5 MAX. GRATINGS IN FLOOR SHALL HAVE SPACES NO GREATER THAN 0.5 INCH WIDE IN ONE DIRECTION. DOORWAY THRESHOLDS SHALL NOT EXCEED 0.5 INCH IN HEIGHT.
8. ACCESSIBLE WATER CLOSETS SHALL BE 17 INCHES TO 19 INCHES, MEASURED FROM THE FLOOR TO THE TOP OF THE SEAT. GRAB BARS SHALL BE 36 INCHES LONG MINIMUM WHEN LOCATED BEHIND WATER CLOSET AND 42 INCHES MINIMUM WHEN LOCATED ALONG SIDE OF WATER CLOSET, AND SHALL BE MOUNTED 33 INCHES TO 36 INCHES ABOVE THE FLOOR. IN ADDITION, A VERTICAL GRAB BAR 18 INCHES MINIMUM IN LENGTH SHALL BE MOUNTED ON THE SIDEWALL WITH THE BOTTOM OF THE BAR LOCATED BETWEEN 39 AND 41 INCHES ABOVE THE FLOOR, AND WITH THE CENTER LINE OF THE BAR LOCATED BETWEEN 39 INCHES AND 41 INCHES FROM THE REAR WALL.
9. ACCESSIBLE URINALS SHALL BE STALL-TYPE OR WALL HUNG WITH ELONGATED RIMS AT A MAXIMUM OF 17 INCHES ABOVE THE FLOOR.
10. ACCESSIBLE LAVATORIES AND SINKS SHALL BE MOUNTED WITH THE RIM NO HIGHER THAN 34 INCHES ABOVE THE FLOOR (THIS EXCLUDES SINKS IN CABINETRY). KNEE CLEARANCE OF AT LEAST 27 INCHES HIGH MUST BE PROVIDED WITH A MINIMUM DEPTH OF 8 INCHES BENEATH THE FIXTURE, AND 9 INCHES HIGH MINIMUM WITH A MINIMUM DEPTH OF 11 INCHES BENEATH THE FIXTURE. THE KNEE SPACE MUST BE AT LEAST 30 INCHES WIDE.
11. HOT WATER AND DRAIN PIPES UNDER ACCESSIBLE LAVATORIES AND SINKS SHALL BE INSULATED OR OTHERWISE CONFIGURED TO PROTECT AGAINST CONTACT. INSULATION OR PROTECTION MATERIALS MAY BE SITE INSTALLED. THERE SHALL BE NO SHARP OR ABRASIVE SURFACES UNDER ACCESSIBLE LAVATORIES AND SINKS.
12. ACCESSIBLE LAVATORIES AND SINKS SHALL HAVE ACCESIBLE FAUCETS (I.E. LEVER-OPERATED, PUSH TYPE, ELECTRONICALLY CONTROLLED).
13. MIRRORS LOCATED ABOVE LAVATORIES, SINKS OR COUNTERS SHALL BE MOUNTED WITH THE BOTTOM EDGE OF THE REFLECTING SURFACE A MAXIMUM OF 40 INCHES ABOVE THE FLOOR. OTHER MIRRORS IN TOILET ROOMS SHALL BE MOUNTED WITH THE BOTTOM EDGE OF THE REFLECTING SURFACE 35 INCHES MAXIMUM ABOVE THE FLOOR.
14. GRAB BARS HAVING A CIRCULAR CROSS SECTION SHALL HAVE AN OUTSIDE DIAMETER OF 1.25 INCHES MINIMUM AND 2.0 INCHES MAXIMUM. THE SPACE BETWEEN THE GRAB BAR AND THE WALL SHALL BE 1.5 INCHES.
15. WATER CLOSET FLUSH CONTROL SHALL BE INSTALLED A MAXIMUM OF 36 INCHES ABOVE THE FLOOR AND SHALL BE LOCATED ON THE OPEN SIDE OF THE WATER CLOSET.
16. DOORS TO ALL ACCESSIBLE SPACES SHALL HAVE ACCESSIBLE HARDWARE (I.E. LEVER – OPERRATED, PUSHTYPE, U-SHAPED) MOUNTED WITH OPERABLE PARTS BETWEEN 34 INCHES MINIMUM AND 48 INCHES MAXIMUM ABOVE THE FLOOR.
17. TOILET STALL DOORS SHALL BE THE SELF-CLOSING TYPE.
18. A TOWEL DISPENSER SHALL BE LOCATED ADJACENT TO ALL ACCESSIBLE LAVTORIES.

MECHANICAL NOTES:

1. ALL SUPPLY AIR REGISTERS SHALL BE 14 INCHES x 14 INCHES ADJUSTABLE WITH 8 INCHES x 18 INCHES (INSIDE) OVERHEAD FIBERGLASS DUCT, UNLESS OTHERWISE SPECIFIED. DUCTS IN UNCONDITIONED SPACES SHALL HAVE R-4.2 MINIMUM INSULATION EXCEPT DUCTS EXPOSED TO VENTILATED ATTICS AND CRAWL SPACES SHALL HAVE R-6.5 INSULATION.
2. INTERIOR DOORS SHALL BE UNDERCUT 1.5 INCHES ABOVE FINISHED FLOOR FOR AIR RETURN AND/OR AS NOTED ON FLOOR PLAN.
3. RESTROOM VENT FANS SHALL PROVIDE 75 CFM EXHAUST PER WATER CLOSET OR URINAL AND VENT TO EXTERIOR.
4. HVAC EQUIPMENT SHALL BE EQUIPPED W/OUTSIDE FRESH AIR INTAKES PROVIDING 5 CFM PER OCCUPANT AND 0.06 CFM PER SQUARE FEET OF BUILDING AREA PER SECTION 403.3 OF IMC.
5. EXHAUST FANS SHALL VENT NO CLOSER THAN 10 FEET FROM MECHANICAL AIR INTAKE.

CODE SUMMARY:

STATE	BUILDING	ELECTRICAL	MECHANICAL	PLUMBING	ACCESSIBILTY	ENERGY CODE
SOUTH CAROLINA	2012 IBC	2011 NEC	2012 IMC	2012 IPC	ICC/ANSI A117.1-09	2009 IECC
N. CAROLINA	NCBC 2012 2012 NCFC	2011 N.C. ELECT. CODE	2012 NCMC	2012 NCPC	NCBC 2012 CHPT. 11 AND ICC/ANSI A117.1-2009	2012 NC ENERGY CODE

CONSULTING ENGINEER	JAMES BRADLEY, P.E. – 212 FOX TRAIL – PARKESBURG, PA. 19365 – (610) 857-2458

SOUTH CAROLINA LICENSED PROFESSIONAL ENGINEER No 4763 JAMES E. BRADLEY
VALID
March 2016
NORTH CAROLINA PROFESSIONAL SEAL 05889 ENGINEER JAMES E. BRADLEY

DIAMOND BUILDERS INC.
P.O. BOX 2200 DOUGLASS, GEORGIA 31534
440 THOMPSON DR. (912) 384-7080

DATE: 2-23-16		
SCALE : NO SCALE		
CODES: NC, SC		
STATE: NC, SC	REVISIONS:	BY: J.B.
–		
DBI6756 A/B 36 x 60 BUSINESS		SHEET 1 OF 6
COVER SHEET	DESTINATION: MOORE, SC	

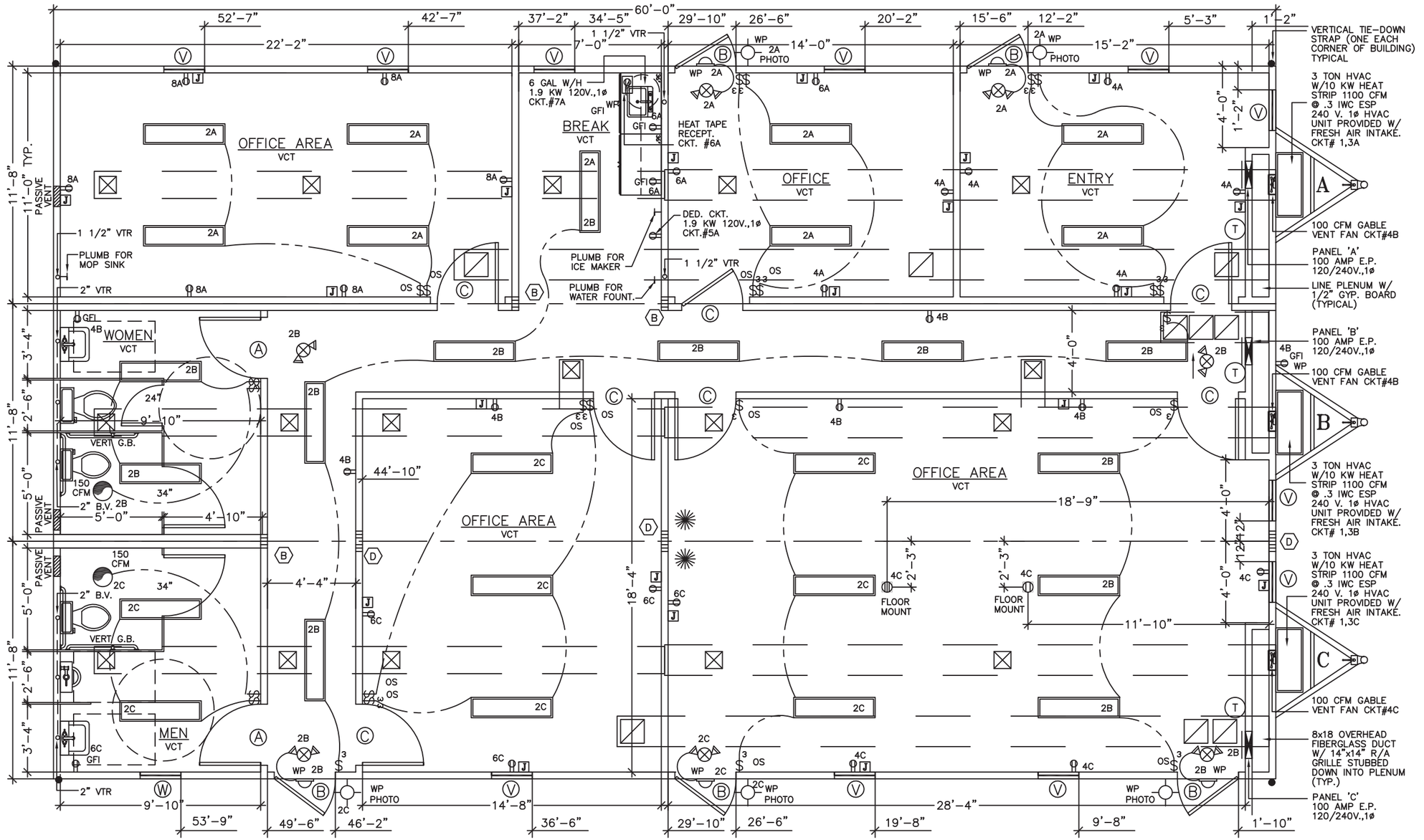

R. JOHNSON
APPROVED
03 01 2016

COLUMN STRAPPING SCHEDULE:	
(A) (2) 2x4 SYP #2 THIS HALF.	(B) (2) 2x4 SYP #2 EACH HALF
(C) (3) 2x4 SYP #2 THIS HALF.	(D) (3) 2x4 SYP #2 EACH HALF.
(E) (4) 2x4 SYP #2 THIS HALF.	(F) (4) 2x4 SYP #2 EACH HALF.
(G) (5) 2x4 SYP #2 THIS HALF.	(H) (2) 2x6 SYP #2 EACH HALF.
✺ WITH RIDGE BEAM BEARING STIFFENER	

NOTES:
1. ALL COLUMN STUDS SHALL BE GLUE/NAILED TOGETHER. PVA GLUE WITH 100% COVERAGE SHALL BE USED.
2. INSTALL TWO STEEL STRAPS AT EACH STUD OF EACH COLUMN.
3. COLUMN STUDS SHALL NOT BE NOTCHED OR BORED.

SYMBOLE	WINDOW SCHEDULE	TOTAL
V	24"X 72" VERTICAL SLIDE, INSULATED BRONZE/TINTED	11
W	24"X72" OBSCURE WINDOW	1

SYMBOLE	DOOR SCHEDULE	TOTAL
A	36"X80" SOLID CORE IMPERIAL OAK W/REDIFRAME	2
B	36"X80" STEEL/STEEL W/10"X10" VIEW PANEL	5
C	36"X80" SOLID CORE IMPERIAL OAK W/REDIFRAME W/4x24 VIEW BLOCK, SAFETY GLASS	7

CONSULTING ENGINEER	JAMES BRADLEY, P.E. — 212 FOX TRAIL — PARKESBURG, PA. 19365 — (610) 857-2458

VALID

SOUTH CAROLINA LICENSED PROFESSIONAL ENGINEER No 4763 JAMES E. BRADLEY March 01 2016

NORTH CAROLINA PROFESSIONAL SEAL 05889 ENGINEER JAMES E. BRADLEY

DIAMOND BUILDERS INC.
P.O. BOX 2200, DOUGLASS, GEORGIA 31534
440 THOMPSON DR. (912) 384-7080

DATE: 2-23-16		
SCALE : 3/16"=1'-0"		
CODES: NC, SC		
STATE: NC, SC	REVISIONS:	BY: J.B.
–		
DBI6756 A/B 36 x 60 BUSINESS		SHEET 2 OF 6
FLOOR PLAN	DESTINATION: MOORE, SC	

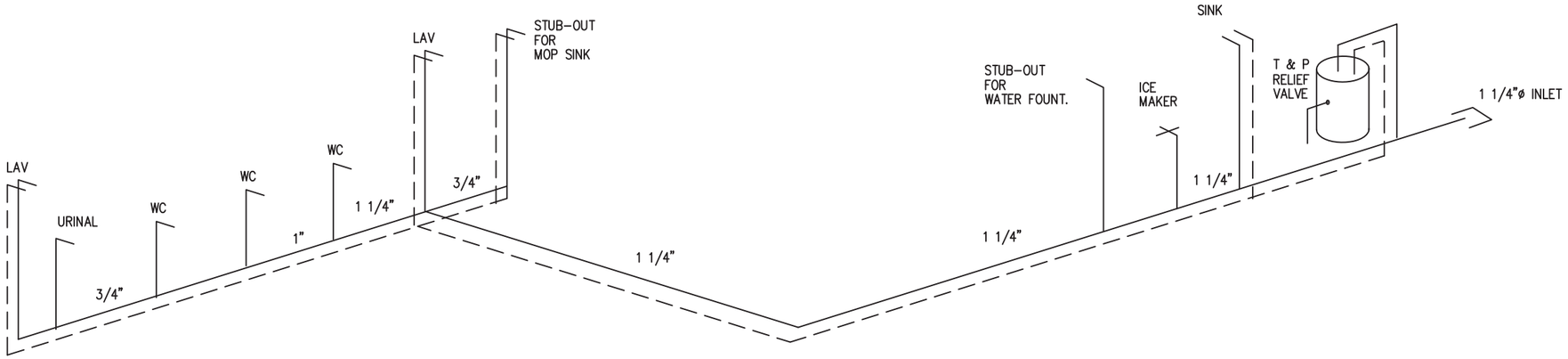

SUPPLY RISER –NTS–

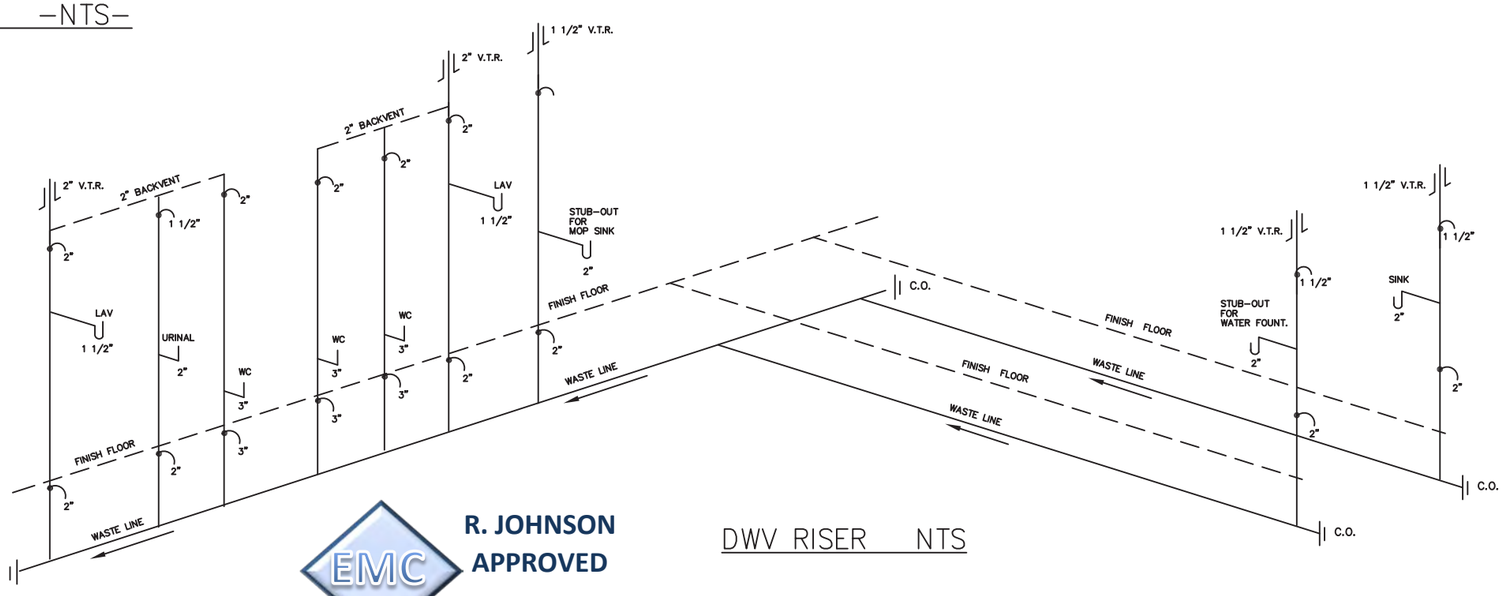

DWV RISER NTS

DWV RISER NOTES:

1. THE DWV RISER INDICATES ONE METHOD OF INSTALLING THE BELOW THE FLOOR PIPING. OTHER APPROVED METHODS MAY BE USED AS NEEDED TO ACCOMMODATE THE ACTUAL SITE CONDITIONS.
2. ALL BELOW FLOOR PIPING AND FITTINGS ARE TO BE SUPPLIED AND INSTALLED ON SITE BY OTHERS.
3. 1 1/2 INCH AND 2 INCH HORIZONTAL DRAIN LINES SHALL BE INSTALLED WITH A SLOPE OF 1/4 INCH PER FOOT.
4. 3 AND 4 INCH HORIZONTAL DRAIN LINES SHALL BE INSTALLED WITH A SLOPE OF 1/8 INCH PER FOOT.
5. BELOW FLOOR HORIZONTAL DRAIN LINES ARE 3 INCH MINIMUM DIAMETER UNLESS INDICATED OTHERWISE.
6. A MAXIMUM OF 3 WATER CLOSETS MAY DISCHARGE INTO A 3 INCH LINE.
7. CHANGES IN DIRECTION SHALL BE MADE WITH FITTINGS AS INDICATED IN TABLE 706.3. VERTICAL TO HORIZONTAL AND HORIZONTAL TO HORIZONTAL CHANGES OF DIRECTION ARE TO BE MADE WITH LONG SWEEP FITTINGS.

SUPPLY LINE SIZING IS BASED ON AN ASSUMED AVAILABLE PRESSURE OF 46 TO 60 PSI AT MAIN INLET AND SHOULD BE VERIFIED PRIOR TO CONSTRUCTION.

——— COLD
— — — — HOT

ALL SUPPLY LINES SHALL BE 3/4", ALL STUB–UPS SHALL BE 1/2" UNLESS OTHERWISE SPECIFIED.

EMC
R. JOHNSON
APPROVED
03 01 2016

VALID

SOUTH CAROLINA LICENSED PROFESSIONAL ENGINEER No 4763 JAMES E. BRADLEY
NORTH CAROLINA PROFESSIONAL SEAL 05889 ENGINEER JAMES E. BRADLEY
March 21, 2016

CONSULTING ENGINEER	JAMES BRADLEY, P.E. — 212 FOX TRAIL — PARKESBURG, PA. 19365 — (610) 857–2458

DIAMOND BUILDERS INC.
P.O. BOX 2200 DOUGLASS, GEORGIA 31534
440 THOMPSON DR. (912) 384–7080

DATE: 2–23–16		
SCALE : NO SCALE		
CODES: NC, SC		
STATE: NC, SC	REVISIONS:	BY:
–		J.B.
DBI6756 A/B 36 x 60 BUSINESS		SHEET 3 OF 6
RISER PLAN	DESTINATION: MOORE, SC	

ELEVATION NOTES: TYPICAL

SEE–CROSS SECTION FOR METHOD OF ROOF VENTILATION

ACCESSIBLE RAMP(S), STAIR(S), AND HANDRAILS ARE SITE INSTALLED, DESIGNED BY OTHERS, AND SUBJECT TO LOCAL JURISDICTION.

FOUNDATION ENCLOSURE (WHEN PROVIDED) MUST HAVE 1 SQUARE FOOT NET VENT AREA PER 1/150TH OF THE FLOOR AREA, AND AN 18" X 24" MINIMUM CRAWL SPACE ACCESS, SITE INSTALLED BY OTHERS SUBJECT TO LOCAL JURISDICTION.

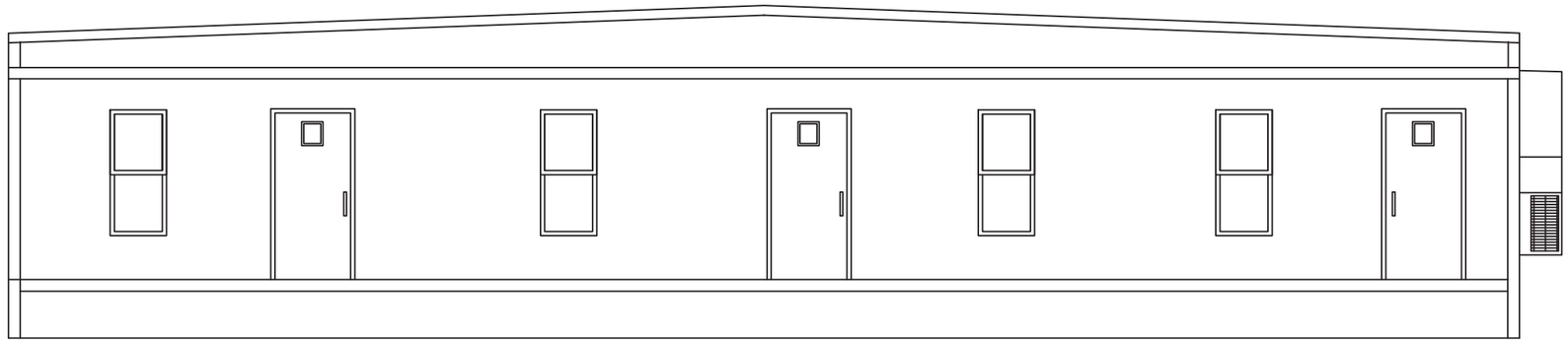

FRONT ELEVATION

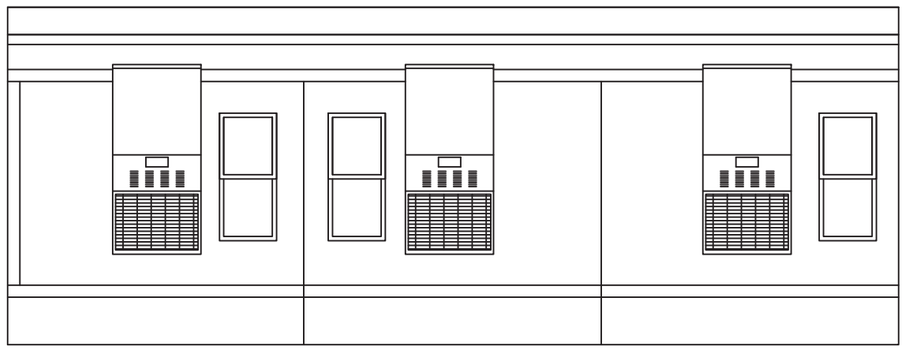

RIGHT ELEVATION

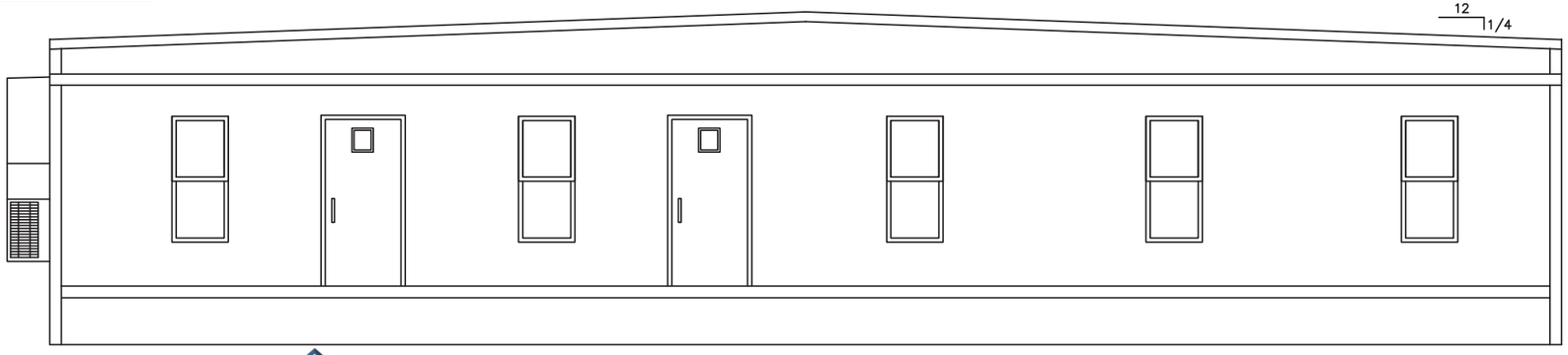

REAR ELEVATION

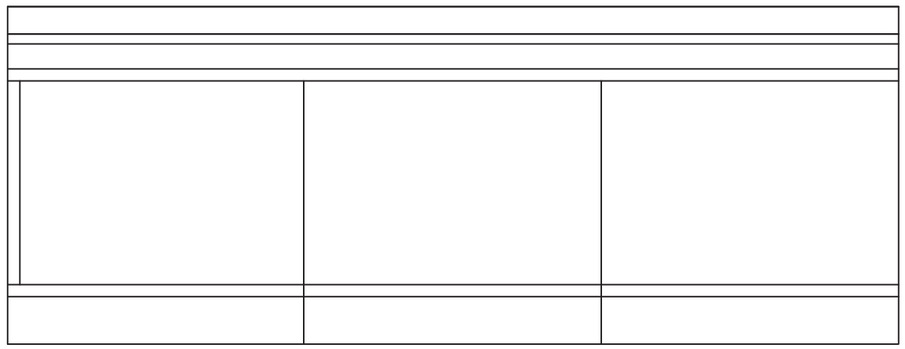

LEFT ELEVATION

EMC

R. JOHNSON
APPROVED
03 01 2016

CONSULTING ENGINEER	JAMES BRADLEY, P.E. — 212 FOX TRAIL — PARKESBURG, PA. 19365 — (610) 857–2458

VALID

SOUTH CAROLINA LICENSED PROFESSIONAL ENGINEER No 4763 JAMES E. BRADLEY March 01, 2016

NORTH CAROLINA PROFESSIONAL SEAL 05889 ENGINEER JAMES E. BRADLEY P.E.

DIAMOND BUILDERS INC.

P.O. BOX 2200, DOUGLASS, GEORGIA 31534
439 THOMPSON DR., (912) 384–7080

DATE: 2–23–16		
SCALE : NO SCALE		
CODES: NC, SC		
STATE: NC, SC	REVISIONS:	BY:
–		J.B.
DBI6756 A/B 36 x 60 BUSINESS		SHEET 4 OF 6
ELEVATIONS	DESTINATION: MOORE, SC	

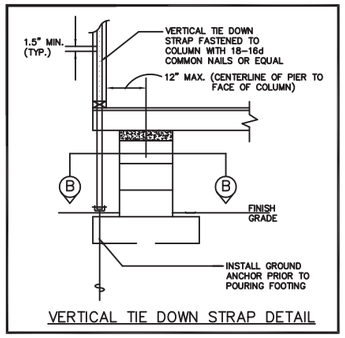

VERTICAL TIE DOWN STRAP DETAIL

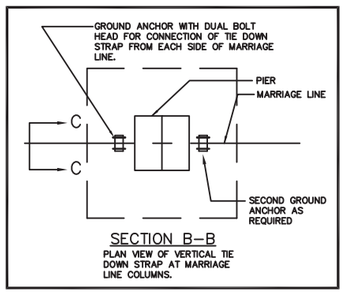

SECTION B–B

PLAN VIEW OF VERTICAL TIE DOWN STRAP AT MARRIAGE LINE COLUMNS.

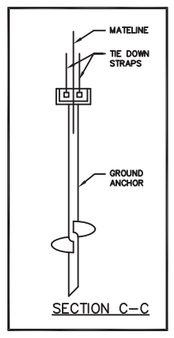

SECTION C–C

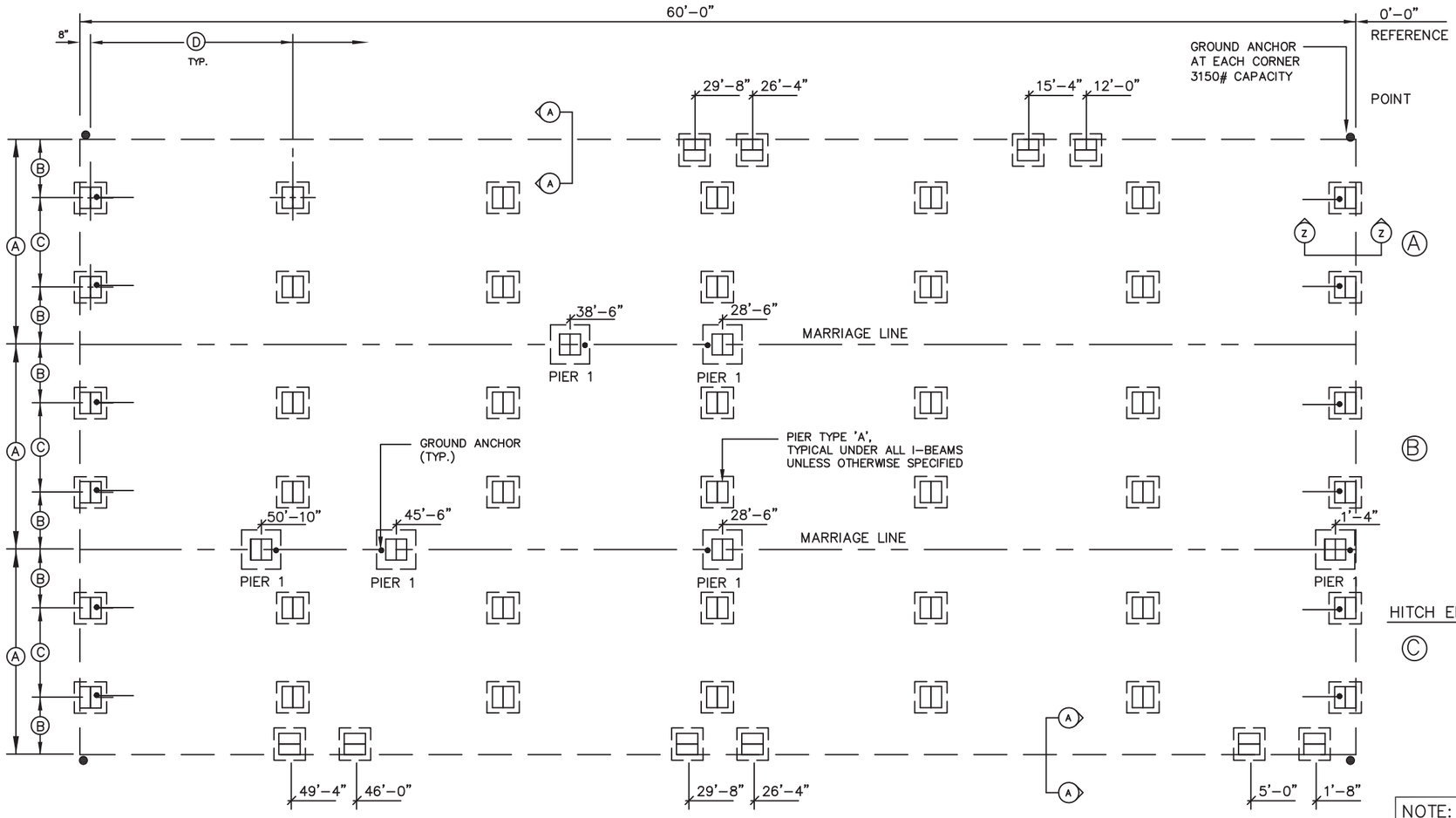

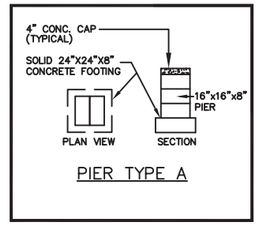

PIER TYPE A

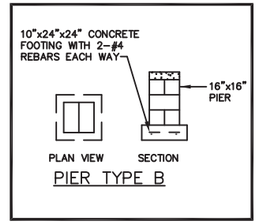

PIER TYPE B

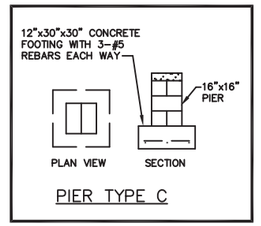

PIER TYPE C

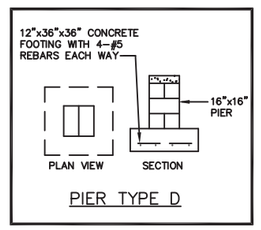

PIER TYPE D

NOTE:
THIS FOUNDATION PLAN IS PROVIDED FOR REFERENCE AS A TYPICAL STANDARD. ACTUAL FOUNDATION CONDITIONS MUST BE EVALUATED FOR APPLICABILITY IF THIS PLAN IS TO BE USED. ALTERNATE FOUNDATION PLANS MAY BE DESIGNED BY OTHERS IN ACCORDANCE WITH THE REQUIREMENTS OF THE JURISDICTION HAVING AUTHORITY.

FOUNDATION NOTES:

1. ALL FOUNDATION CONSTRUCTION, MATERIALS, AND INSTALLATION SHALL BE IN ACCORDANCE WITH ALL APPLICABLE STATE AND LOCAL CODES.
2. TIE–DOWN STRAPS TO BE 1–1/4"x .035" TYPE–1, FINISH B, GRADE 1 ZINC COATED STEEL STRAPPING CERTIFIED BY A REGISTERED ENGINEER OR ARCHITECT AS CONFORMING WITH ASTM D3953–91. TIE DOWN STRAPS AND CONNECTING HARDWARE SHALL HAVE 3150# MINIMUM WORKING CAPACITY.
3. GROUND ANCHORS SHALL HAVE 3150# MINIMUM WORKING CAPACITY, AND SHALL BE INSTALLED IN ACCORDANCE WITH THE MANUFACTURER'S SPECIFICATIONS. DESIGN OF GROUND ANCHOR, INCLUDING SHAFT LENGTH, NUMBER AND DIAMETER OF HELIXES, ETC., TO BE AS SPECIFIED BY THE GROUND ANCHOR MANUFACTURER FOR THE ACTUAL SOIL TYPE ENCOUNTERED. IF THE HOLDING OR PULLOUT CAPACITIES OF GROUND ANCHORS ARE BELOW THE VALUES SPECIFIED ABOVE THE ARCHITECT/ENGINEER MUST BE CONSULTED FOR AN ALTERNATE ANCHORAGE DESIGN.
4. THE FIRST TIE–DOWN STRAP FROM ENDWALLS SHALL NOT EXCEED 1/2 THE MAXIMUM SPACING INDICATED.
5. ALL PIERS SHALL BE CONSTRUCTED OF CONCRETE MASONRY UNITS CONFORMING TO ASTM C90. MASONRY UNITS SHALL BE LAID IN TYPE M OR S MORTAR OR COVERED WITH SURFACE BONDING CEMENT INSTALLED IN ACCORDANCE WITH ITS LISTING. PIER FOOTINGS SHALL BE AS DESCRIBED ABOVE.
6. MINIMUM CONCRETE FOOTING COMPRESSIVE STRENGTH 2,500 PSI AT 28 DAYS.
7. ALL REINFORCEMENT BARS SHALL COMPLY WITH ASTM A615, GRADE 60. REINFORCEMENT BARS SHALL BE EQUALLY SPACED AND PLACED WITH 3" CLEARANCE FROM BOTTOM AND SIDES OF THE FOOTING.
8. SEE SHEET 1 OF 5 FOR BUILDING DESIGN LOADS
9. I–BEAM SUPPORT PIERS MAY BE INSTALLED LATERALLY (90° FROM THE ORIENTATION SHOWN ON THE FOUNDATION PLAN). CENTERLINE OF EACH PIER MUST BE LOCATED DIRECTLY BELOW THE I–BEAM CENTERLINE.
10. SOIL BEARING CAPACITY SHOWN ON THIS PLAN IS ASSUMED. IF THE ACTUAL SOIL BEARING CAPACITY IS LESS THAN 2,000 PSF, THE ARCHITECT/ENGINEER MUST BE CONSULTED FOR REQUIRED ALTERNATE FOUNDATION DESIGN. FOOTINGS SHALL BE PLACED ON NON–EXPANSIVE SOILS ONLY.
11. INSTALL BLOCK PIER ON EACH SIDE OF ALL EXTERIOR DOOR OPENINGS. (MANUFACTURER'S RECOMMENDATION ONLY – OPTIONAL WHEN NOT SHOWN) SLIGHT ADJUSTMENT MAY BE REQUIRED TO INSURE OPENABILITY AFTER INSTALLATION OF BUILDING IS COMPLETE.
12. THE AREA UNDER FOOTINGS AND FOUNDATIONS SHALL HAVE ALL VEGETATION, STUMPS, ROOTS, AND FOREIGN MATERIALS REMOVED PRIOR TO THEIR CONSTRUCTION.
13. THE FOUNDATION DIMENSIONS SHOWN ARE NOMINAL. AN INCREASE IN MODULE WIDTH SHOULD BE EXPECTED DUE TO MODULE EXPANSION, SETTING TOLERANCES, ETC. THE FOUNDATION CONTRACTOR SHOULD CONSULT WITH THE MANUFACTURER OF THE MODULES PRIOR TO CONSTRUCTION OF THE FOUNDATION TO DETERMINE THE AMOUNT OF INCREASED WIDTH TO BE ADDED TO THE NOMINAL DIMENSIONS SHOWN ABOVE.

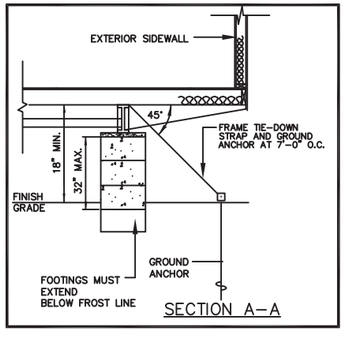

SECTION A–A

NOTE:
THE NUMBER OF PIERS SHOWN ON THIS FOUNDATION PLAN IS NO INDICATION OF THE AMOUNT OF PIERS REQUIRED AND NEEDED FOR THIS BUILDING. SEE MAXIMUM PIER SPACING CHART BELOW FOR THE CORRECT NUMBER OF PIERS REQUIRED FOR EACH SOIL BEARING CAPACITY.

FOUNDATION DIMENSIONS

A MODULE WIDTH	B PIER TO MODULE EDGE	C STEEL BEAM SPACING
11'–8"	34 1/4"	95 1/2"

D MAXIMUM PIER SPACING	MINIMUM SOIL BEARING CAPACITY
9'–0"	2000 PSF
9'–0"	3000 PSF

R. JOHNSON
APPROVED
03 01 2016

MARRIAGE WALL PIER REQUIREMENTS

PIER NUMBER	MINIMUM SOIL BEARING CAPACITY	PIER TYPE	NUMBER OF VERTICAL TIE DOWN STRAPS REQ'D (EACH MODULE)
1	2000 PSF	D	1
	3000 PSF	C	1
	2000 PSF		
	3000 PSF		

CONSULTING ENGINEER | JAMES BRADLEY, P.E. – 212 FOX TRAIL – PARKESBURG, PA. 19365 – (610) 857–2458

VALID

SOUTH CAROLINA LICENSED PROFESSIONAL ENGINEER No 4763 JAMES E. BRADLEY

NORTH CAROLINA PROFESSIONAL SEAL 05889 ENGINEER JAMES E. BRADLEY

March 01 2016

DIAMOND BUILDERS INC.
P.O. BOX 2200 439 THOMPSON DR.
DOUGLASS, GEORGIA 31534 (912) 384–7080

DATE: 2–23–16		
SCALE : NO SCALE		
CODES: NC, SC		
STATE: NC, SC	REVISIONS:	BY:
–		J.B.
DBI6756 A/B 36 x 60 BUSINESS		SHEET 5 OF 6
FOUNDATION	DESTINATION: MOORE, SC	

INTERIOR FINISH MATERIAL:

CEILING – 1/2" GYP. BOARD CEILING INSTALLED PER MANUFACTURERS SPECIFICATIONS (SEASPRAY FINISH)

WALL – 1/2" GYP. BOARD INSTALLED PER MANUFACTURERS PER MANUFACTURERS SPECIFICATIONS (VCG THROUGHOUT)

FLOOR – AS NOTED ON FLOOR PLAN

NOTE:
INTERIOR WALL AND CEILING FINISH SHALL BE CLASS B OR BETTER IN CORRIDORS AND CLASS C OR BETTER IN ROOMS AND ENCLOSED SPACES. FLOOR FINISHES SHALL BE CLASS II OR BETTER.

EXTERIOR FINISH MATERIAL:

ROOF – MULE–HIDE 45 MIL (BLACK) EPDM FULLY ADHERED IN ACCORDANCE WITH ESR–1776 OVER 7/16" MULE–HIDE FR DECK PANEL 'C' INSTALLED PER MANUFACTURERS SPECIFICATIONS.

WALL – 0.19 ALUMINUM SIDING OVER APPROVED MOISTURE BARRIER INSTALLED PER MANUFACTURERS SPECIFICATIONS

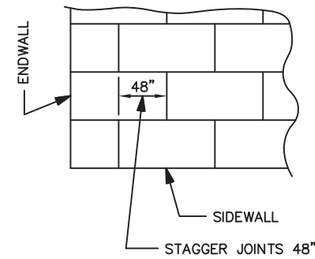

MULEHIDE:
FR DECK PANEL 'C' TO BE FASTENED TO TRUSSES PER APPROVED STRUCTURAL PACKAGE

ROOF SHEATHING DETAIL

ATTIC VENTILATION IS PROVIDED BY (1) 100 CFM FAN AND (1) GABLE VENT PER MODULE.

APPROVED TRUSS DESIGN:
TRUSS MANUF # : UNIVERSAL
TRUSS DRAWING. # F227419 (NC)
TRUSS DRAWING. # F227418 (SC)
SEE ATTACHED DWG.

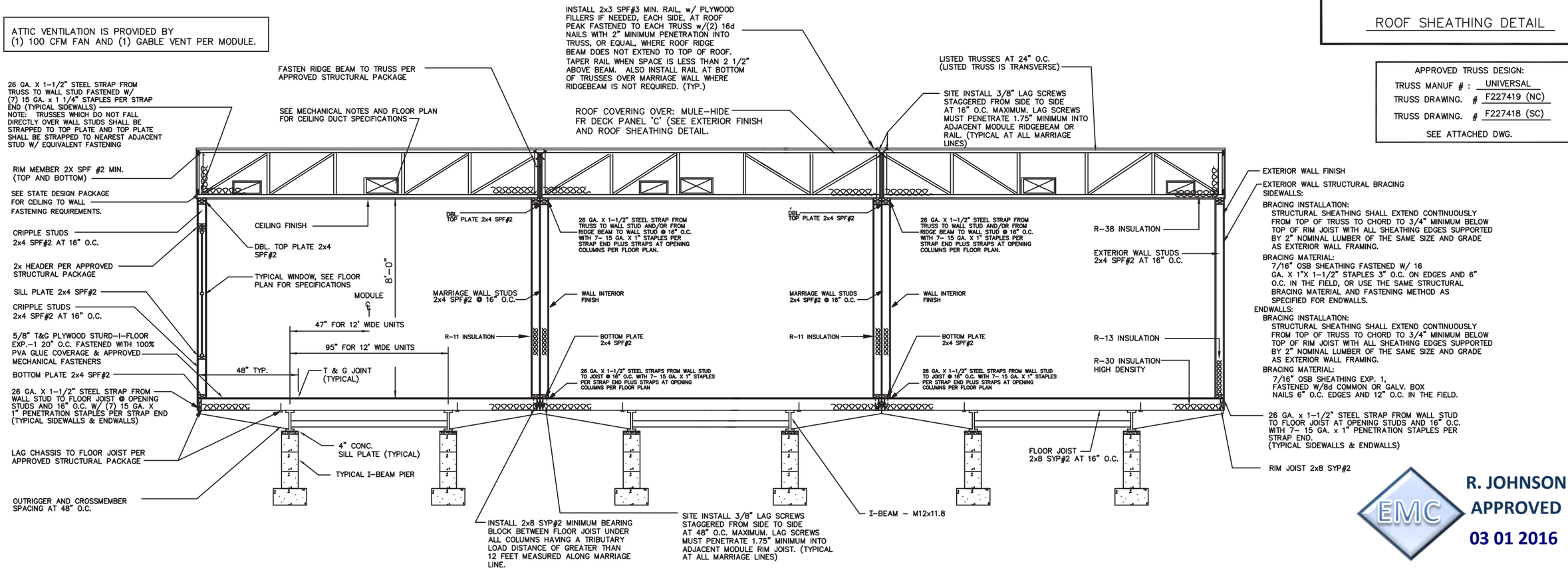

R. JOHNSON
APPROVED
03 01 2016

RIDGE BEAM CONSTRUCTION:

(2) LAYER x 3/4 "PLYWOOD, RATED SHEATHING, EXP.–1, STRUCT.–1, 5 PLY/5 LAYER, 48/24 EACH HALF CONTINUOUS ENTIRE LENGTH OF CLEARSPAN.

(4) LAYER x 3/4 "PLYWOOD, RATED SHEATHING, EXP.–1, STRUCT.–1, 5 PLY/5 LAYER, 48/24 EACH HALF CONTINUOUS ENTIRE LENGTH OF CLEARSPAN.

NOTES:

1. PLYWOOD FACE GRAIN MUST BE PARALLEL TO THE RIDGE BEAM SPAN.
2. ALL PLYWOOD BUTT JOINTS MUST BE STAGGERED 24" MINIMUM.
3. ALL RIDGE BEAM PLYWOOD LAMINATIONS MUST BE THE SAME DEPTH, THICKNESS, AND GRADE OF PLYWOOD. NO LUMBER OR PLYWOOD FLANGES ARE PERMITTED.
4. PLYWOOD MUST BE MANUFACTURED IN ACCORDANCE W/ PS I–95.
5. PLYWOOD LAMINATIONS IN EACH HALF OF THE UNITS MUST BE GLUE NAILED TO ADJACENT LAYERS IN ACCORDANCE W/ PDS SUPPLEMENT #5, W/ AN ADHESIVE COMPLYING W/ ASTM D2559, OR CA25–4.
6. PLYWOOD MUST NOT BE TREATED W/ A FIRE RETARDANT PROCESS.
7. MOISTURE CONTENT MUST BE LESS THAN 16%.
8. BEAMS SUPPORTED BY ENDWALL COLUMNS MUST EXTEND CONTINUOUS OVER COLUMNS TO EXTERIOR FACE OF ENDWALL.
9. INSTALL (2X4) X 20" SPF#3 RIDGE BEAM BEARING STIFFENER OVER SUPPORT COLUMNS, WHEN SPECIFIED ON FLOOR PLAN; FASTEN THE FACE OF THE STIFFENER TO THE RIDGE BEAM W/ 100% GLUE COVERAGE AND (6) 16 GA. X 2–1/2" STAPLES.

GENERAL CROSS–SECTION NOTES:

1. UNLESS OTHERWISE SPECIFIED, ALL STEEL MUST COMPLY W/ ASTM A36, YIELD STRENGTH = 36 KSI.
2. ALL LAG SCREWS MUST COMPLY W/ ANSI/ ASME B18.2.1. F_{YB}= 60 KSI MINIMUM.
3. SEE FOUNDATION PLAN FOR PIER AND TIE–DOWN STRAPPING LOCATIONS, ORIENTATIONS, AND SPECIFICATIONS.

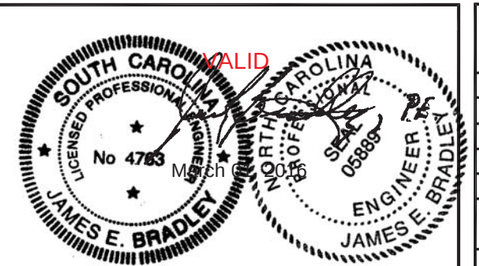

CONSULTING ENGINEER | JAMES BRADLEY, P.E. – 212 FOX TRAIL – PARKESBURG, PA. 19365 – (610) 857–2458

DIAMOND BUILDERS INC.
P.O. BOX 2200, DOUGLASS, GEORGIA 31534
439 THOMPSON DR. (912) 384–7080

DATE: 2–23–16		
SCALE : NO SCALE		
CODES: NC, SC		
STATE: NC, SC	REVISIONS:	BY:
–		J.B.

DBI6756 A/B 36 x 60 BUSINESS

CROSS SECTION | DESTINATION: MOORE, SC

SHEET 6 OF 6